GENERAL NOTES

1 ALL MATERIAL IS 304 GRADE STAINLESS STEEL.
ALL WELDS PICKLED FOR MAXIMUM CORROSION RESISTANCE.

2 SCREENING MEDIUM IS WEDGEWIRE:

TOTAL AREA:	24 m2
SPECIFIC FLOWRATE:	50 m3/hr/m2
PERCENTAGE OPEN AREA	40%
PROFILE:	0.8 mm SLOT

3 DRIVE UNIT: SEW EURODRIVE GEARED MOTOR

4 THE SCREENS HOOK ONTO THE CLIENT'S IN-TANK LAUNDER FLANGE.

5 TOTAL OPERATING WEIGHT: 2500 kg

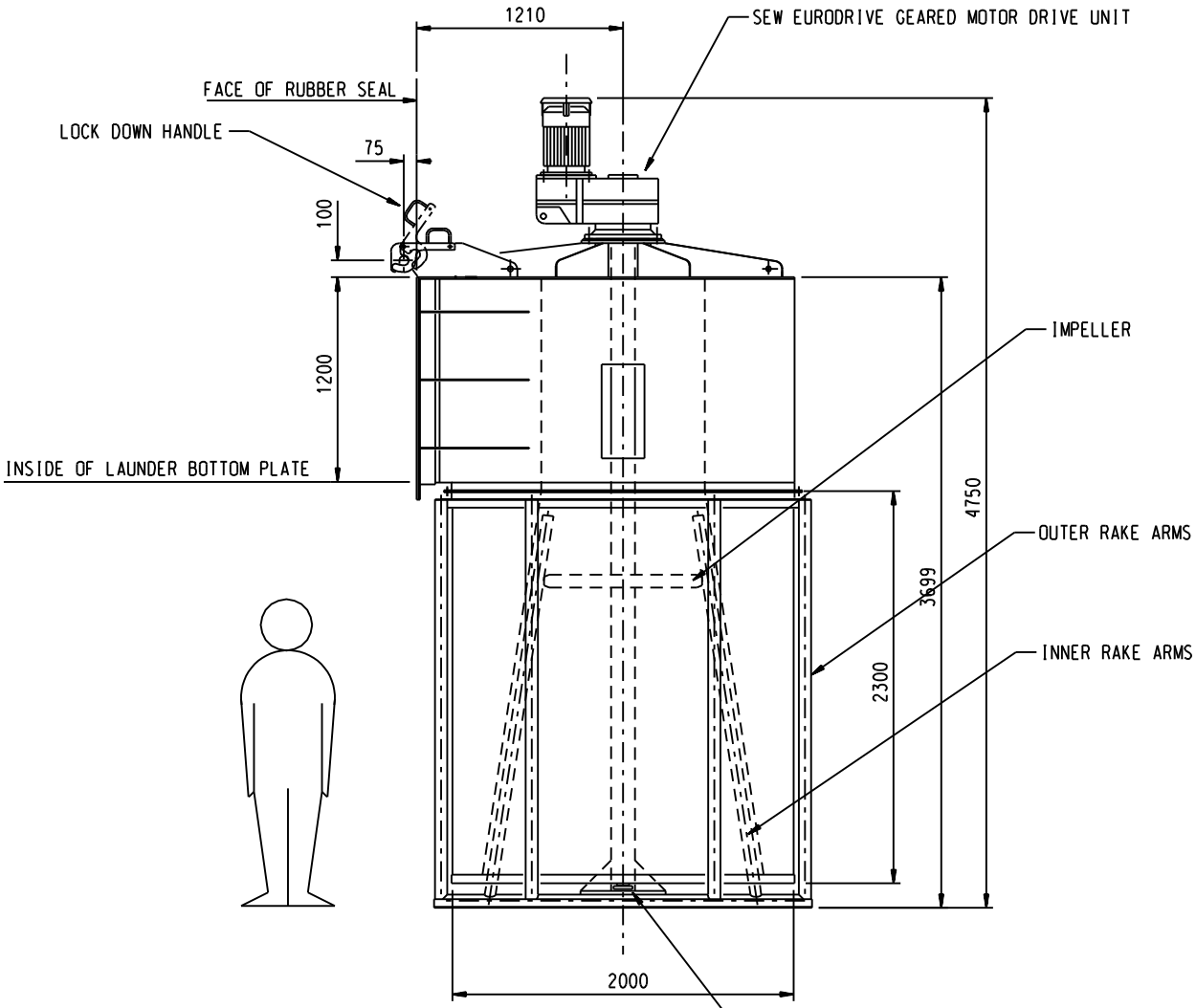

ELEVATION

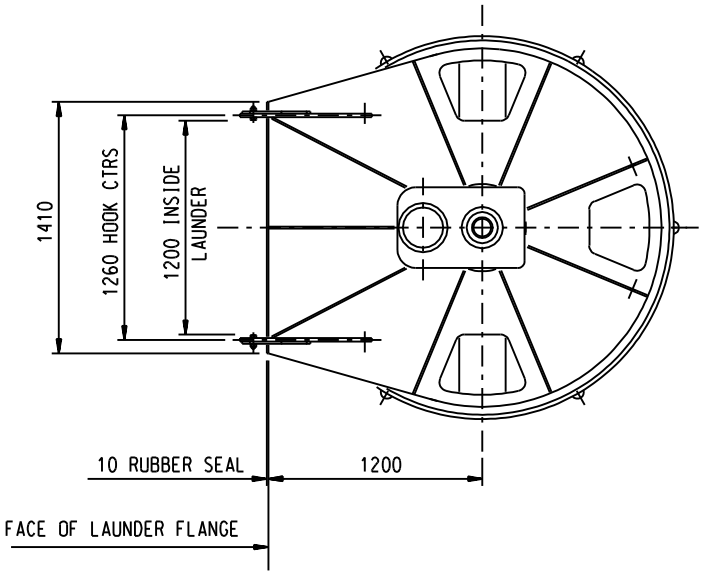

PLAN

REFERENCES		REVISION							
ORG NUMBER	TITLE	NO	DATE	DESCRIPTION	BY	CHKD	DESIGNED	RCP	
							DATE	JAN 12	
							DRAWN	PEI	
							DATE	JAN 12	
							CHECKED		
							DATE		

PROCESS EQUIPMENT INTERNATIONAL PTY LTD
Perth
Western Australia
tel 0411 107 535 fax (08) 9332 6565 info@pei.com.au www.pei.com.au

THIS DRAWING IS THE PROPERTY OF PROCESS EQUIPMENT INTERNATIONAL PTY LTD THE DRAWING AND ITS CONTENTS ARE CONFIDENTIAL ARE SUBJECT TO RETURN ON DEMAND AND MAY NOT BE COPIED OR DISCLOSED TO ANY THIRD PARTY OR USED DIRECTLY OR INDIRECTLY FOR ANY OTHER PURPOSE THAN AS EXPRESSLY DETERMINED IN WRITING BY PROCESS EQUIPMENT INTERNATIONAL PTY LTD

ISSUED FOR CONSTRUCTION
BY:
DATE:

SCALE 1 : 10

CLIENT:
PROJECT:

INTERTANK SCREEN
MODEL No. RPA-24-120DSH
GENERAL ARRGT

DRAWING NUMBER A1 - PROJ No - M - 01

REV